ASSEMBLY TEMPLATE

FORWARD VISION III

2924K, 2924KF, 2926K, 2926KF, 2964K, 2964KF, 2966K, & 2966KF SERIES
ASSEMBLY INSTRUCTIONS

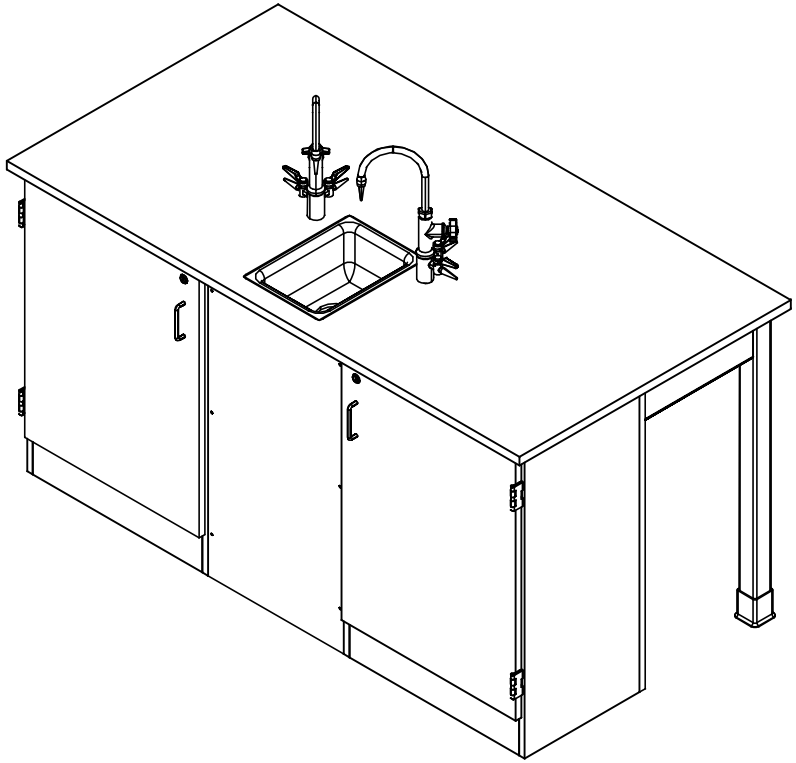

NOTE:

1. MODEL VIEWS MAY NOT REPRESENT EXACT MODEL PURCHASED

REV.	DESCRIPTION	DATE	NAME	ECN NO.
A	CREATED DRAWING	11/8/16	EMK	-
REVISION LEVEL				

ALL DIMENSIONS ARE IN INCHES UNLESS NOTED OTHERWISE	DWN BY: EMK	DATE DWN: 11/8/16	
CABINET SQUARENESS = ± .0625 FRACTIONAL VALUES = ± 1/32" - ALL VALUES ± OVERALL -	APR BY:	DATE APR:	
	APR BY:	DATE APR:	

CONFIDENTIAL:
ALL DESIGN RIGHTS RESERVED
THE INFORMATION, DATA, DESIGN, AND DRAWINGS EMBODIED IN THIS DOCUMENT AND ALL REPRODUCTIONS THEREOF ARE THE EXCLUSIVE PROPERTY OF DIVERSIFIED WOODCRAFTS, INC.

THESE DOCUMENTS ARE SUPPLIED WITH THE UNDERSTANDING THAT THEY WILL NOT BE DISCLOSED TO THIRD PARTIES WITHOUT WRITTEN CONSENT OF DIVERSIFIED WOODCRAFTS, INC. ANY REPRODUCTION IN PART OR WHOLE WITHOUT WRITTEN CONSENT IS SUBJECT TO LEGAL ACTION.

TITLE:
FORWARD VISION III
ASSEMBLY INSTRUCTIONS

DRAWING NUMBER:	SCALE:	SHEET:	REVISION:
FORWARD VISION III	NTS	1 OF 13	REV A

ASSEMBLY TEMPLATE

TOOLS REQUIRED

½" WRENCH
½" SOCKET AND TORQUE WRENCH - OPTIONAL
CONTACT CEMENT
SCREW DRIVER
C-CLAMPS
SHIM STOCK (IF NEEDED)

ASSEMBLY COMPONENTS

ITEMS INCLUDED	PART #	PART DESCRIPTION	QTY
TOP	VARIES	TOP, (STYLE VARIES), 1.00X36X68,BLK, (EITHER FIXTURE OR FLAT)	1
CABINET	N/A	24"W X 35"H X 15.25"D	2
REMOVABLE PANEL	N/A	18"W X 35"H X 0.75"D	1
BACK PANEL	N/A	66"W X 35"H X 0.75"D	1
SCREWS - REMOVABLE PANEL	100495	SCREW,#10X1- ½ PHIL TR. SMS,ZN	6
SCREWS - BACK PANEL	100478	SCREW,#8X1 ¼ SQ. WASHER FLAT HEAD	12
LONG APRON	N/A	LONG APRON - 0.81"THK X 4.50"W 61.50"L	1
SHORT APRON	N/A	SHORT APRON - 0.81"THK X 4.50"W X 14.563"L	2
L BRACKET	100355	BRACKET, RAIL 1.25X1.25X4.25	2
SCREWS - L BRACKET	100649	SCREW,#8X¾ PHIL TRUSS HEAD SMS	8
BRACKET - CORNER LEG	100077	CORNERS,STEEL TABLE APRON	2
SCREWS - CORNER LEG	100037	SCREW,#10X⅝ QUAD PNHD LUB	8
LEG	500101	LEG,OAK 2.25X2.25X34.25	2
LEG HARDWARE	520001	LEG HARDWARE KIT, 1 LEG	2
LEG BOOT	100076	LEG BOOT,BLK RUBBER	2
SILICONE	100711	SILICONE,SEALANT,CLEAR	1
RUBBER BASE MOLDING	100283	RUBBER BASE MOLDING (SOLD BY FOOT)	14
STAINLESS STEEL CORNERS	100057	CORNER-STAINLESS STEEL, BASE	4
SCREWS - BASE	100064	SCREW,#6X½ PTH SMS SS SCREW	16

NOTE:

1. TOPS ARE EITHER PHENOLIC OR EPOXY.
2. **XX** INDICATES ITEMS USED ONLY FOR THE "K" SERIES.

REV.	DESCRIPTION	DATE	NAME	ECN NO.
A	CREATED DRAWING	11/8/16	EMK	-
REVISION LEVEL				

ALL DIMENSIONS ARE IN INCHES UNLESS NOTED OTHERWISE

CABINET SQUARENESS = ± .0625
FRACTIONAL VALUES = ± 1/32"
- ALL VALUES ± OVERALL -

DWN BY:	EMK	DATE DWN:	11/8/16
APR BY:		DATE APR:	
APR BY:		DATE APR:	

CONFIDENTIAL:
ALL DESIGN RIGHTS RESERVED
THE INFORMATION, DATA, DESIGN, AND DRAWINGS EMBODIED IN THIS DOCUMENT AND ALL REPRODUCTIONS THEREOF ARE THE EXCLUSIVE PROPERTY OF DIVERSIFIED WOODCRAFTS, INC.

THESE DOCUMENTS ARE SUPPLIED WITH THE UNDERSTANDING THAT THEY WILL NOT BE DISCLOSED TO THIRD PARTIES WITHOUT WRITTEN CONSENT OF DIVERSIFIED WOODCRAFTS, INC. ANY REPRODUCTION IN PART OR WHOLE WITHOUT WRITTEN CONSENT IS SUBJECT TO LEGAL ACTION.

TITLE:
FORWARD VISION III
TOOLS AND ASSEMBLY COMPONENTS

DRAWING NUMBER:	SCALE:	SHEET:	REVISION:
FORWARD VISION III	NTS	2 OF 13	REV A

ASSEMBLY TEMPLATE

ASSEMBLY COMPONENTS

ITEMS INCLUDED	PART #	PART DESCRIPTION	QTY
ELECTRICAL BOX	100033	ELECTRICAL BOX 3.00X2X2.5 DEEP	1
ELECTRICAL OUTLET	100034	ELEC,OUTLET,GFI,20A 125V,BLK	1
FIXTURE - FAUCET	100074-BKR	FIXTURE,L65-WSA-DIV(MULTI-SERVICE)	2
FIXTURE - SINK	100691	SINK,EPOXY L3,BLK	1
FIXTURE - SINK TRAP	100056	SINK TRAP,PLASTIC ADJUSTABLE	1
FIXTURE - SINK STOPPER	100112	SINK STOPPER 1 ½,BLK	1
FIXTURE - STRAINER	100055	SINK,OUTLET/STRAINER EPOXY,BLK	1

NOTE:

1. TOPS ARE EITHER PHENOLIC OR EPOXY.
2. **XX** INDICATES ITEMS USED ONLY FOR THE "K" SERIES.

REV.	DESCRIPTION	DATE	NAME	ECN NO.
A	CREATED DRAWING	11/8/16	EMK	-

REVISION LEVEL

ALL DIMENSIONS ARE IN INCHES UNLESS NOTED OTHERWISE

CABINET SQUARENESS = ± .0625
FRACTIONAL VALUES = ± 1/32"
- ALL VALUES ± OVERALL -

DWN BY:	EMK	DATE DWN:	11/8/16
APR BY:		DATE APR:	
APR BY:		DATE APR:	

CONFIDENTIAL:
ALL DESIGN RIGHTS RESERVED
THE INFORMATION, DATA, DESIGN, AND DRAWINGS EMBODIED IN THIS DOCUMENT AND ALL REPRODUCTIONS THEREOF ARE THE EXCLUSIVE PROPERTY OF DIVERSIFIED WOODCRAFTS, INC.

THESE DOCUMENTS ARE SUPPLIED WITH THE UNDERSTANDING THAT THEY WILL NOT BE DISCLOSED TO THIRD PARTIES WITHOUT WRITTEN CONSENT OF DIVERSIFIED WOODCRAFTS, INC. ANY REPRODUCTION IN PART OR WHOLE WITHOUT WRITTEN CONSENT IS SUBJECT TO LEGAL ACTION.

TITLE:
FORWARD VISION III
TOOLS AND ASSEMBLY COMPONENTS

DRAWING NUMBER:	SCALE:	SHEET:	REVISION:
FORWARD VISION III	NTS	3 OF 13	REV A

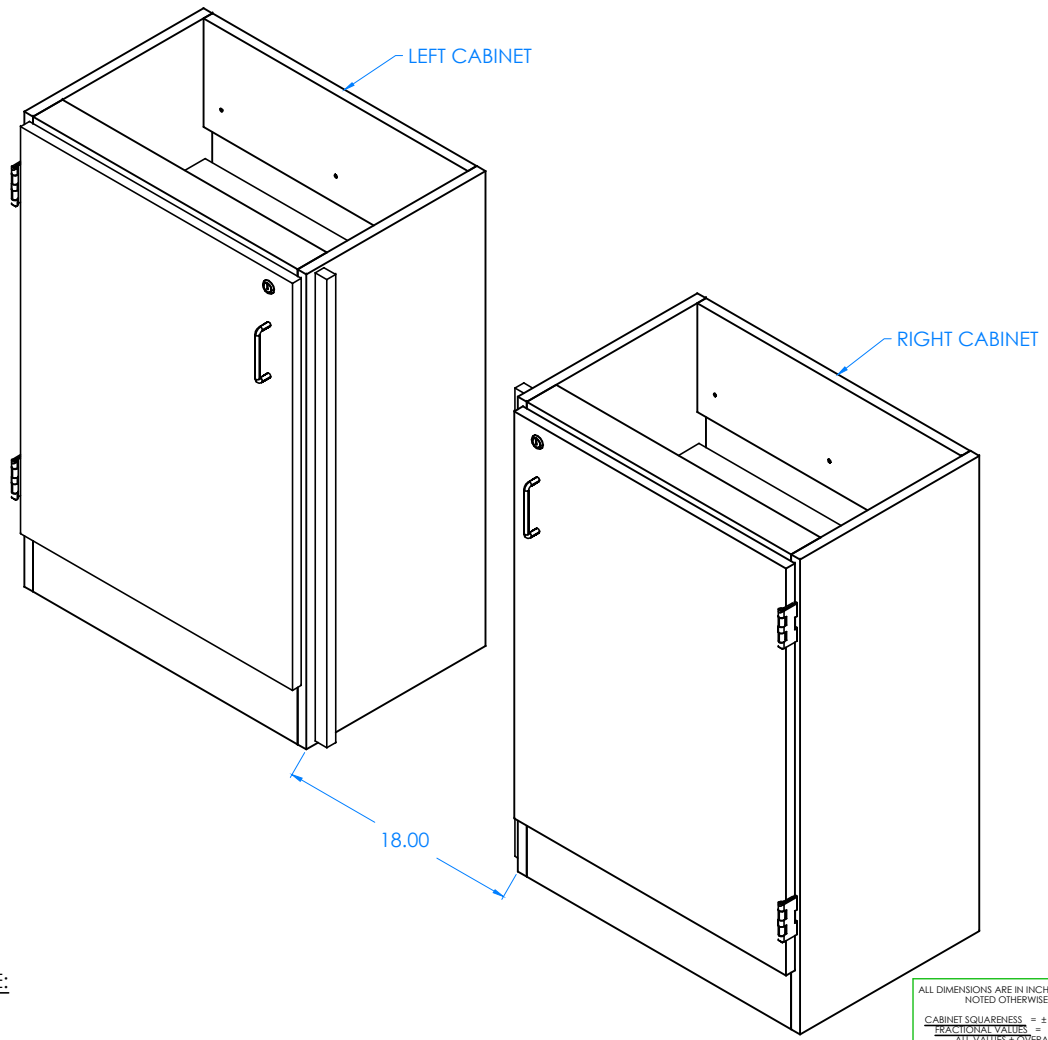

STEP 1:

- POSITION THE TWO CABINETS IN DESIRED LOCATION.
- MAKE SURE DOOR HINGES ARE ON THE OUTSIDE.
- IF YOU HAVE A "K" SERIES UNIT, PLACE UNIT OVER UTILITY HOOKUPS.
- LEAVE ENOUGH ROOM IN BETWEEN CABINETS FOR REMOVABLE PANEL.
- LEVEL CABINETS.
- ATTACH TO FLOOR.

NOTE:

1.

REV.	DESCRIPTION	DATE	NAME	ECN NO.
A	CREATED DRAWING	11/8/16	EMK	-
REVISION LEVEL				

ALL DIMENSIONS ARE IN INCHES UNLESS NOTED OTHERWISE

CABINET SQUARENESS = ± .0625
FRACTIONAL VALUES = ± 1/32"
- ALL VALUES ± OVERALL -

DWN BY:	EMK	DATE DWN:	11/8/16
APR BY:		DATE APR:	
APR BY:		DATE APR:	

CONFIDENTIAL:
ALL DESIGN RIGHTS RESERVED
THE INFORMATION, DATA, DESIGN, AND DRAWINGS EMBODIED IN THIS DOCUMENT AND ALL REPRODUCTIONS THEREOF ARE THE EXCLUSIVE PROPERTY OF DIVERSIFIED WOODCRAFTS, INC.

THESE DOCUMENTS ARE SUPPLIED WITH THE UNDERSTANDING THAT THEY WILL NOT BE DISCLOSED TO THIRD PARTIES WITHOUT WRITTEN CONSENT OF DIVERSIFIED WOODCRAFTS, INC. ANY REPRODUCTION IN PART OR WHOLE WITHOUT WRITTEN CONSENT IS SUBJECT TO LEGAL ACTION.

TITLE:
FORWARD VISION III
ASSEMBLY INSTRUCTIONS

DRAWING NUMBER:	SCALE:	SHEET:	REVISION:
FORWARD VISION III	NTS	4 OF 13	REV A

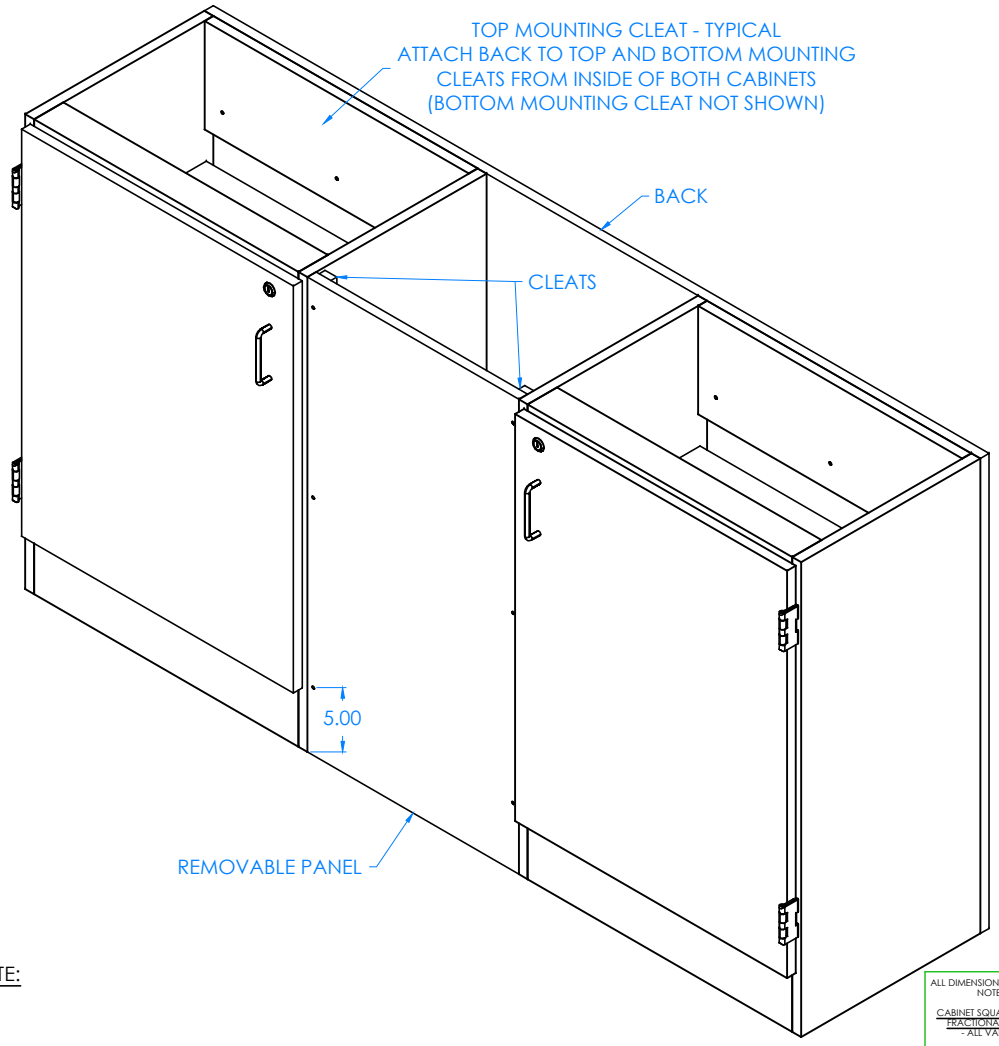

STEP 2:

- ATTACH REMOVABLE PANEL WITH HARDWARE PROVIDED TO THE CLEATS ON SIDES OF LEFT AND RIGHT CABINETS BY DRILLING PILOT HOLES THROUGH CLEATS.
- POSITION REMOVABLE PANEL SO THAT BOTTOM HOLES ARE MORE THAN 4" ABOVE FLOOR.
- ATTACH BACK PANEL TO BACK OF CABINETS WITH THE SCREWS PROVIDED INTO MOUNTING CLEATS LOCATED INSIDE ON TOP AND BOTTOM OF BOTH CABINETS.

NOTE:

1.

REV.	DESCRIPTION	DATE	NAME	ECN NO.
A	CREATED DRAWING	11/8/16	EMK	-
REVISION LEVEL				

ALL DIMENSIONS ARE IN INCHES UNLESS NOTED OTHERWISE

CABINET SQUARENESS = ± .0625
FRACTIONAL VALUES = ± 1/32"
- ALL VALUES ± OVERALL -

DWN BY:	EMK	DATE DWN:	11/8/16
APR BY:		DATE APR:	
APR BY:		DATE APR:	

CONFIDENTIAL:
ALL DESIGN RIGHTS RESERVED
THE INFORMATION, DATA, DESIGN, AND DRAWINGS EMBODIED IN THIS DOCUMENT AND ALL REPRODUCTIONS THEREOF ARE THE EXCLUSIVE PROPERTY OF DIVERSIFIED WOODCRAFTS, INC.

THESE DOCUMENTS ARE SUPPLIED WITH THE UNDERSTANDING THAT THEY WILL NOT BE DISCLOSED TO THIRD PARTIES WITHOUT WRITTEN CONSENT OF DIVERSIFIED WOODCRAFTS, INC. ANY REPRODUCTION IN PART OR WHOLE WITHOUT WRITTEN CONSENT IS SUBJECT TO LEGAL ACTION.

TITLE:
FORWARD VISION III
ASSEMBLY INSTRUCTIONS

DRAWING NUMBER:	SCALE:	SHEET:	REVISION:
FORWARD VISION III	NTS	5 OF 13	REV A

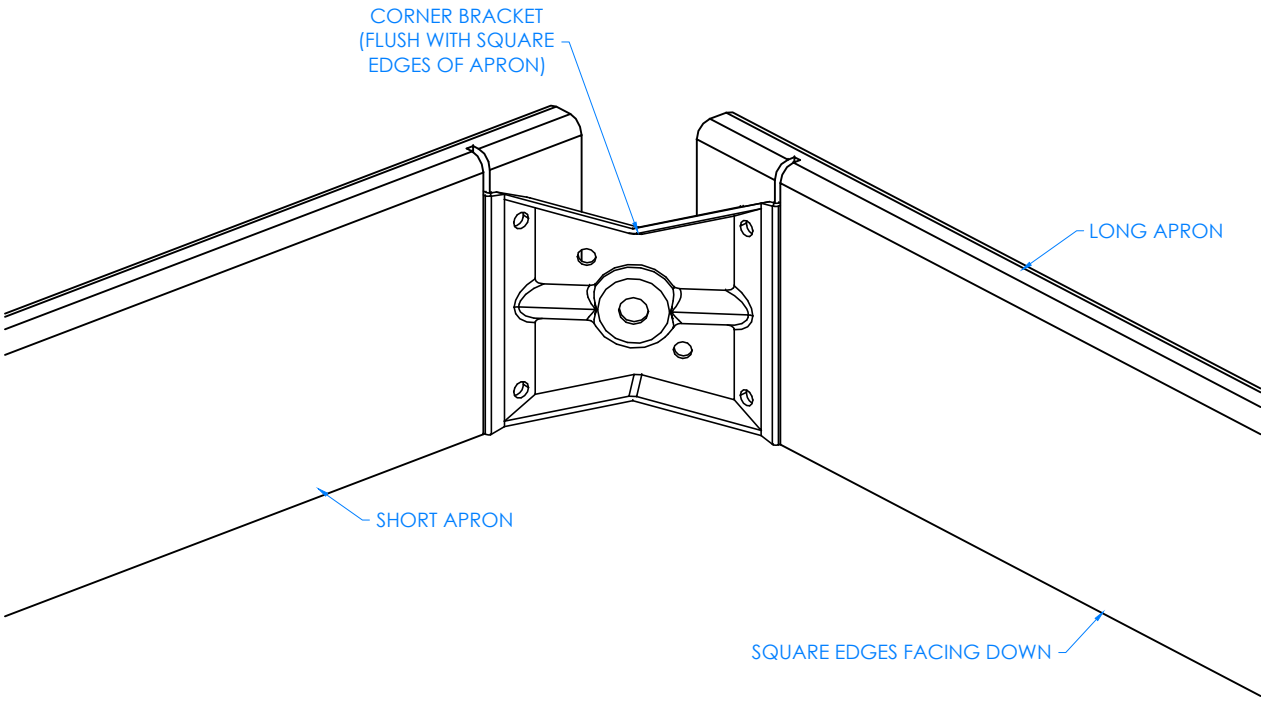

CLOSE UP OF CORNER BRACKET ASSEMBLY

STEP 3:

- LAYOUT WORKSTATION FRAME WITH SQUARE EDGES OF APRONS ON FLOOR, ROUNDED EDGES FACING UP.
- CONNECT LONG APRON AND SHORT APRON TOGETHER BY USING THE CORNER LEG BRACKET.
- MAKE SURE BRACKET IS FLUSH WITH SQUARE EDGES OF APRONS.
- REPEAT ON OTHER BRACKET.

NOTE:

1.

REV.	DESCRIPTION	DATE	NAME	ECN NO.
A	CREATED DRAWING	11/8/16	EMK	-

REVISION LEVEL

ALL DIMENSIONS ARE IN INCHES UNLESS NOTED OTHERWISE	DWN BY: EMK	DATE DWN: 11/8/16	
CABINET SQUARENESS = ± .0625 FRACTIONAL VALUES = ± 1/32" - ALL VALUES ± OVERALL -	APR BY:	DATE APR:	
	APR BY:	DATE APR:	

CONFIDENTIAL:
ALL DESIGN RIGHTS RESERVED
THE INFORMATION, DATA, DESIGN, AND DRAWINGS EMBODIED IN THIS DOCUMENT AND ALL REPRODUCTIONS THEREOF ARE THE EXCLUSIVE PROPERTY OF DIVERSIFIED WOODCRAFTS, INC.

THESE DOCUMENTS ARE SUPPLIED WITH THE UNDERSTANDING THAT THEY WILL NOT BE DISCLOSED TO THIRD PARTIES WITHOUT WRITTEN CONSENT OF DIVERSIFIED WOODCRAFTS, INC. ANY REPRODUCTION IN PART OR WHOLE WITHOUT WRITTEN CONSENT IS SUBJECT TO LEGAL ACTION.

TITLE:
FORWARD VISION III
ASSEMBLY INSTRUCTIONS

DRAWING NUMBER:	SCALE:	SHEET:	REVISION:
FORWARD VISION III	NTS	6 OF 13	REV A

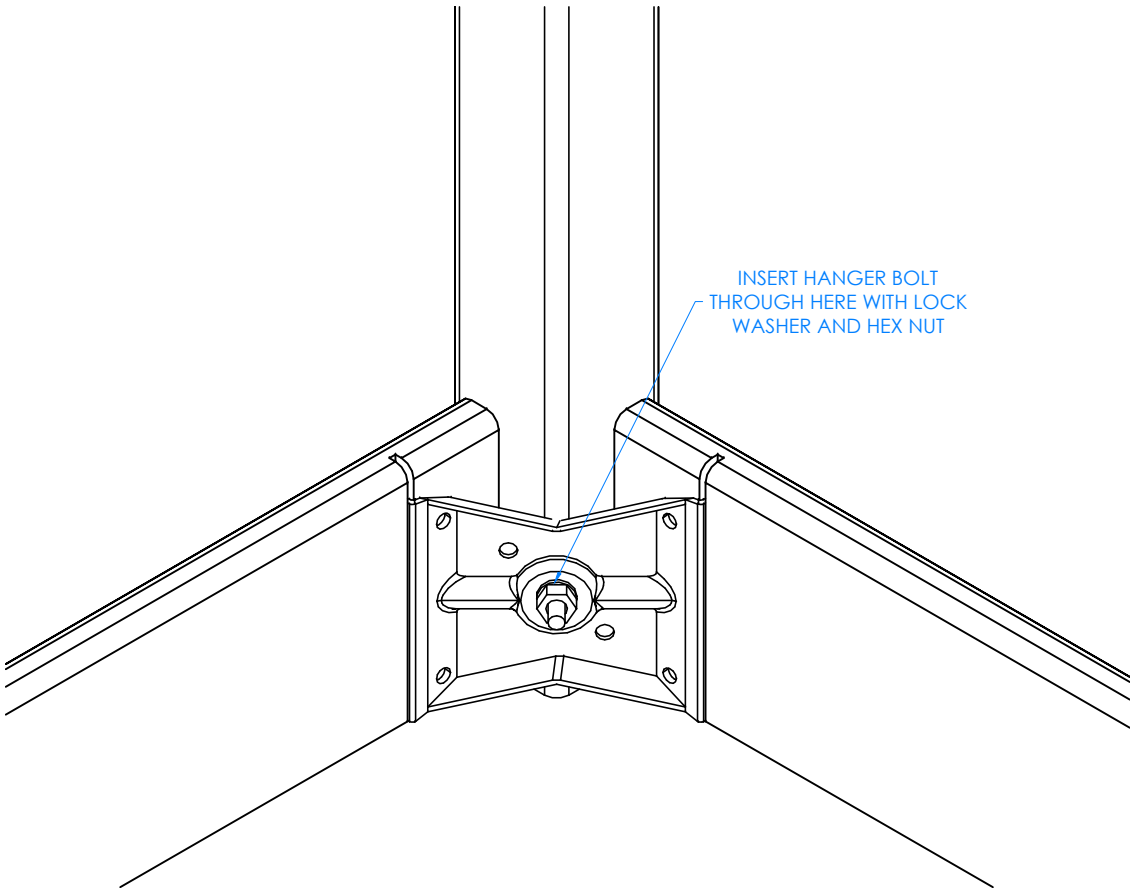

CLOSE UP OF CORNER BRACKET ASSEMBLY

STEP 4:

- INSERT HANGER BOLT ON ONE LEG THROUGH CORNER BRACKET AND INSERT LOCK WASHER AND HEX NUT.
- TIGHTEN NUT USING ½" WRENCH OR ½" SOCKET AND TORQUE WRENCH, TO A MINIMUM OF 12FT LBS BUT NOT TO EXCEED 17FT LBS.
- REPEAT FOR OTHER CORNER LEG.

NOTE:

1.

REV.	DESCRIPTION	DATE	NAME	ECN NO.
A	CREATED DRAWING	11/8/16	EMK	-
REVISION LEVEL				

ALL DIMENSIONS ARE IN INCHES UNLESS NOTED OTHERWISE

CABINET SQUARENESS = ± .0625
FRACTIONAL VALUES = ± 1/32"
- ALL VALUES ± OVERALL -

DWN BY:	EMK	DATE DWN:	11/8/16
APR BY:		DATE APR:	
APR BY:		DATE APR:	

CONFIDENTIAL:
ALL DESIGN RIGHTS RESERVED
THE INFORMATION, DATA, DESIGN, AND DRAWINGS EMBODIED IN THIS DOCUMENT AND ALL REPRODUCTIONS THEREOF ARE THE EXCLUSIVE PROPERTY OF DIVERSIFIED WOODCRAFTS, INC.

THESE DOCUMENTS ARE SUPPLIED WITH THE UNDERSTANDING THAT THEY WILL NOT BE DISCLOSED TO THIRD PARTIES WITHOUT WRITTEN CONSENT OF DIVERSIFIED WOODCRAFTS, INC. ANY REPRODUCTION IN PART OR WHOLE WITHOUT WRITTEN CONSENT IS SUBJECT TO LEGAL ACTION.

TITLE:
FORWARD VISION III
ASSEMBLY INSTRUCTIONS

DRAWING NUMBER:	SCALE:	SHEET:	REVISION:
FORWARD VISION III	NTS	7 OF 13	REV A

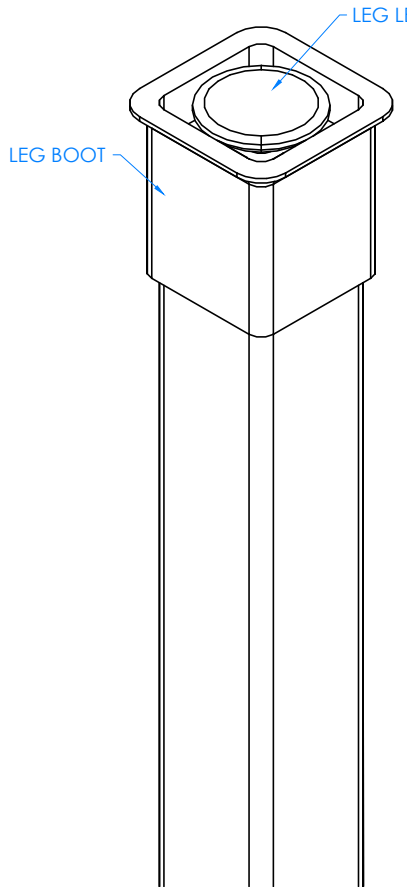

CLOSE UP OF LEG LEVELER AND LEG BOOT ASSEMBLY

STEP 5:

- SLIDE LEG BOOT ONTO LEG WITH FLARED END TOWARDS BOTTOM OF LEG.
- SCREW LEG LEVELER INTO T-NUT ON BOTTOM OF THE LEG.
- REPEAT FOR ALL LEGS.

NOTE:

1.

REV.	DESCRIPTION	DATE	NAME	ECN NO.
A	CREATED DRAWING	11/8/16	EMK	-
REVISION LEVEL				

ALL DIMENSIONS ARE IN INCHES UNLESS NOTED OTHERWISE

CABINET SQUARENESS = ± .0625
FRACTIONAL VALUES = ± 1/32"
- ALL VALUES ± OVERALL -

DWN BY:	EMK	DATE DWN:	11/8/16
APR BY:		DATE APR:	
APR BY:		DATE APR:	

CONFIDENTIAL:
ALL DESIGN RIGHTS RESERVED
THE INFORMATION, DATA, DESIGN, AND DRAWINGS EMBODIED IN THIS DOCUMENT AND ALL REPRODUCTIONS THEREOF ARE THE EXCLUSIVE PROPERTY OF DIVERSIFIED WOODCRAFTS, INC.

THESE DOCUMENTS ARE SUPPLIED WITH THE UNDERSTANDING THAT THEY WILL NOT BE DISCLOSED TO THIRD PARTIES WITHOUT WRITTEN CONSENT OF DIVERSIFIED WOODCRAFTS, INC. ANY REPRODUCTION IN PART OR WHOLE WITHOUT WRITTEN CONSENT IS SUBJECT TO LEGAL ACTION.

TITLE:
FORWARD VISION III
ASSEMBLY INSTRUCTIONS

DRAWING NUMBER:	SCALE:	SHEET:	REVISION:
FORWARD VISION III	NTS	8 OF 13	REV A

ASSEMBLY TEMPLATE

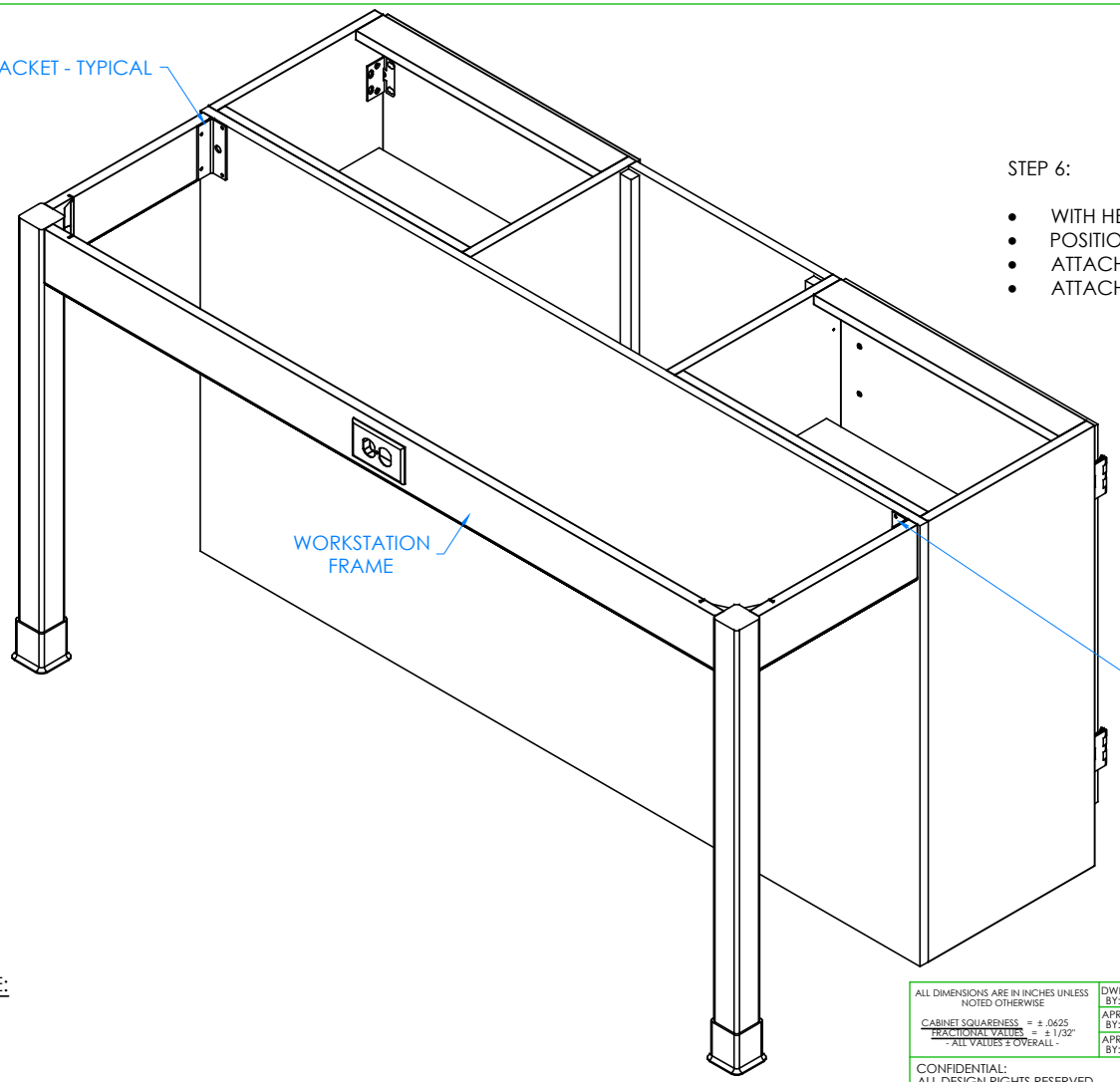

STEP 6:

- WITH HELP FROM ANOTHER PERSON, STAND WORKSTATION FRAME UP.
- POSITION FRAME UP TO CABINET.
- ATTACH L BRACKET ONTO APRON WITH HARDWARE PROVIDED.
- ATTACH BRACKET ONTO BACK OF WORKSTATION WITH THE REMAINING SCREWS.

NOTE:

1.

BACKSIDE OF WORKSTATION

REV.	DESCRIPTION	DATE	NAME	ECN NO.
A	CREATED DRAWING	11/8/16	EMK	-
REVISION LEVEL				

ALL DIMENSIONS ARE IN INCHES UNLESS NOTED OTHERWISE

CABINET SQUARENESS = ± .0625
FRACTIONAL VALUES = ± 1/32"
- ALL VALUES ± OVERALL -

DWN BY:	EMK	DATE DWN:	11/8/16
APR BY:		DATE APR:	
APR BY:		DATE APR:	

CONFIDENTIAL:
ALL DESIGN RIGHTS RESERVED
THE INFORMATION, DATA, DESIGN, AND DRAWINGS EMBODIED IN THIS DOCUMENT AND ALL REPRODUCTIONS THEREOF ARE THE EXCLUSIVE PROPERTY OF DIVERSIFIED WOODCRAFTS, INC.

THESE DOCUMENTS ARE SUPPLIED WITH THE UNDERSTANDING THAT THEY WILL NOT BE DISCLOSED TO THIRD PARTIES WITHOUT WRITTEN CONSENT OF DIVERSIFIED WOODCRAFTS, INC. ANY REPRODUCTION IN PART OR WHOLE WITHOUT WRITTEN CONSENT IS SUBJECT TO LEGAL ACTION.

TITLE:
FORWARD VISION III
ASSEMBLY INSTRUCTIONS

DRAWING NUMBER:	SCALE:	SHEET:	REVISION:
FORWARD VISION III	NTS	9 OF 13	REV A

STEP 7:

- ADJUST LEG LEVELERS TO LEVEL WORKSTATION FRAME WITH CABINETS.
- APPLY SILICONE ADHESIVE TO TOP EDGES OF CABINET AND WINGS.
- PLACE TOP ON UNIT WITH PROPER OVERHANG (CENTERED ON WORKSTATION).
- CLAMP ON TOP TO WINGS TO REMOVE ANY WARP USING SHIMS AND C-CLAMPS, IF NEEDED, WHEN ALIGNING THE TOP (DO THIS BEFORE ADHESIVE ON EDGES SETS UP).
- LET CURE FOR 6-12 HOURS.
- DO NOT APPLY SILICONE ADHESIVE TO REMOVABLE PANEL.

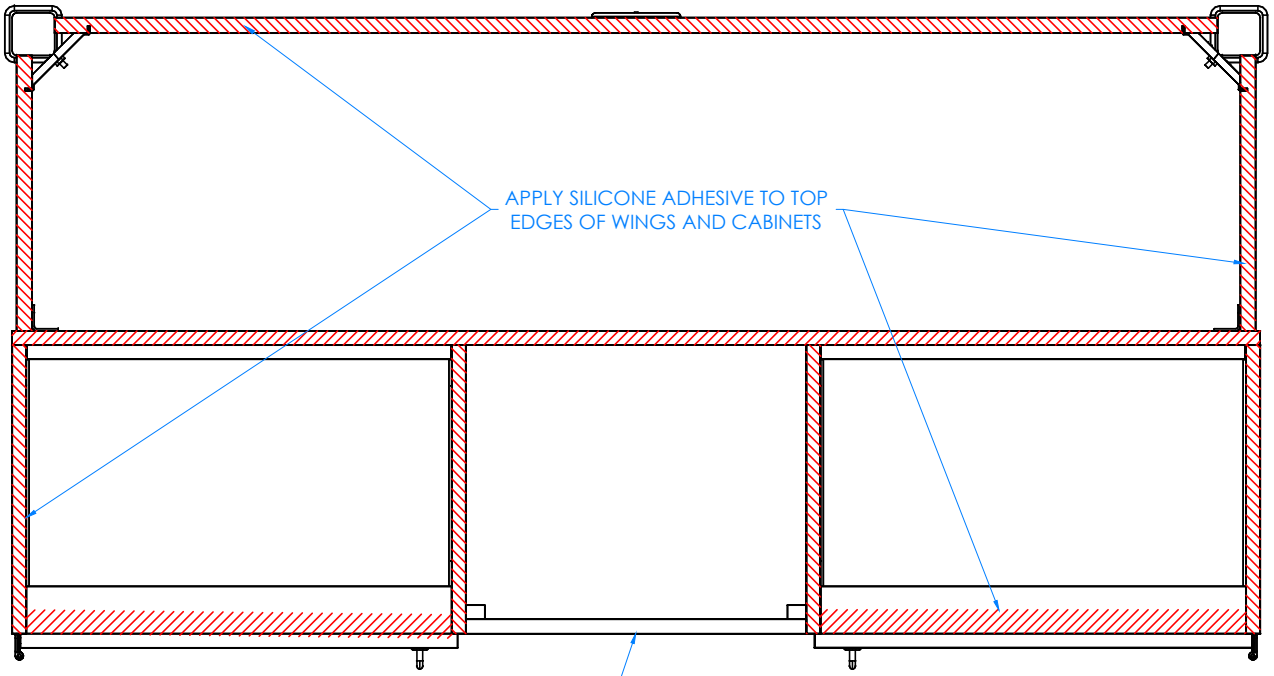

TOP VIEW OF WORKSTATION SHOWN

NOTE:

1.

REV.	DESCRIPTION	DATE	NAME	ECN NO.
A	CREATED DRAWING	11/8/16	EMK	-
REVISION LEVEL				

ALL DIMENSIONS ARE IN INCHES UNLESS NOTED OTHERWISE	DWN BY:	EMK	DATE DWN: 11/8/16
CABINET SQUARENESS = ± .0625 FRACTIONAL VALUES = ± 1/32" - ALL VALUES ± OVERALL -	APR BY:		DATE APR:
	APR BY:		DATE APR:

CONFIDENTIAL:
ALL DESIGN RIGHTS RESERVED
THE INFORMATION, DATA, DESIGN, AND DRAWINGS EMBODIED IN THIS DOCUMENT AND ALL REPRODUCTIONS THEREOF ARE THE EXCLUSIVE PROPERTY OF DIVERSIFIED WOODCRAFTS, INC.

THESE DOCUMENTS ARE SUPPLIED WITH THE UNDERSTANDING THAT THEY WILL NOT BE DISCLOSED TO THIRD PARTIES WITHOUT WRITTEN CONSENT OF DIVERSIFIED WOODCRAFTS, INC. ANY REPRODUCTION IN PART OR WHOLE WITHOUT WRITTEN CONSENT IS SUBJECT TO LEGAL ACTION.

TITLE:
FORWARD VISION III
ASSEMBLY INSTRUCTIONS

DRAWING NUMBER:	SCALE:	SHEET:	REVISION:
FORWARD VISION III	NTS	10 OF 13	REV A

STEP 8:

- IF YOU DO NOT HAVE A "K" SERIES UNIT, SKIP TO STEP 9.
- APPLY SILICONE ADHESIVE TO THE SINK OPENING ON TOP.
- LOWER SINK INTO OPENING.
- WIPE OFF ANY EXCESS CAULK AND ALLOW TO SET.
- LET CURE FOR 6-12 HOURS.

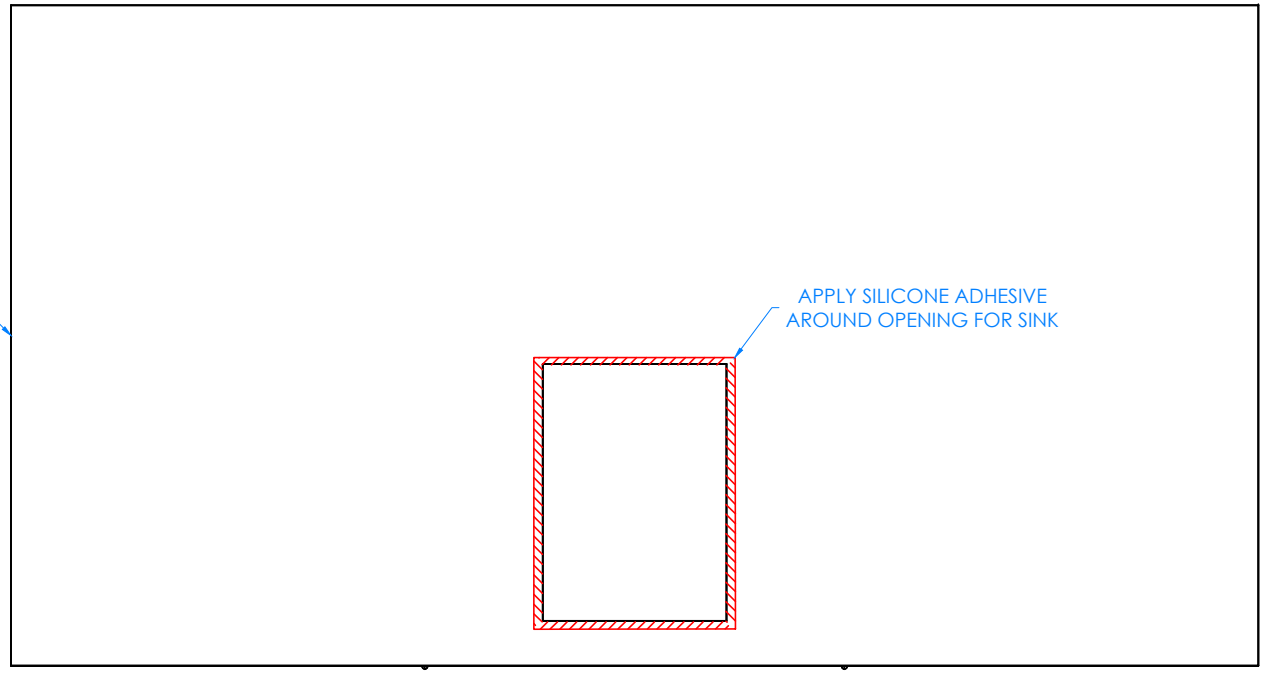

TOP VIEW OF WORKSTATION SHOWN

NOTE:

1.

REV.	DESCRIPTION	DATE	NAME	ECN NO.
A	CREATED DRAWING	11/8/16	EMK	-

REVISION LEVEL

ALL DIMENSIONS ARE IN INCHES UNLESS NOTED OTHERWISE

CABINET SQUARENESS = ± .0625
FRACTIONAL VALUES = ± 1/32"
- ALL VALUES ± OVERALL -

DWN BY:	EMK	DATE DWN:	11/8/16
APR BY:		DATE APR:	
APR BY:		DATE APR:	

CONFIDENTIAL:
ALL DESIGN RIGHTS RESERVED
THE INFORMATION, DATA, DESIGN, AND DRAWINGS EMBODIED IN THIS DOCUMENT AND ALL REPRODUCTIONS THEREOF ARE THE EXCLUSIVE PROPERTY OF DIVERSIFIED WOODCRAFTS, INC.

THESE DOCUMENTS ARE SUPPLIED WITH THE UNDERSTANDING THAT THEY WILL NOT BE DISCLOSED TO THIRD PARTIES WITHOUT WRITTEN CONSENT OF DIVERSIFIED WOODCRAFTS, INC. ANY REPRODUCTION IN PART OR WHOLE WITHOUT WRITTEN CONSENT IS SUBJECT TO LEGAL ACTION.

TITLE:
FORWARD VISION III
ASSEMBLY INSTRUCTIONS

DRAWING NUMBER:	SCALE:	SHEET:	REVISION:
FORWARD VISION III	NTS	11 OF 13	REV A

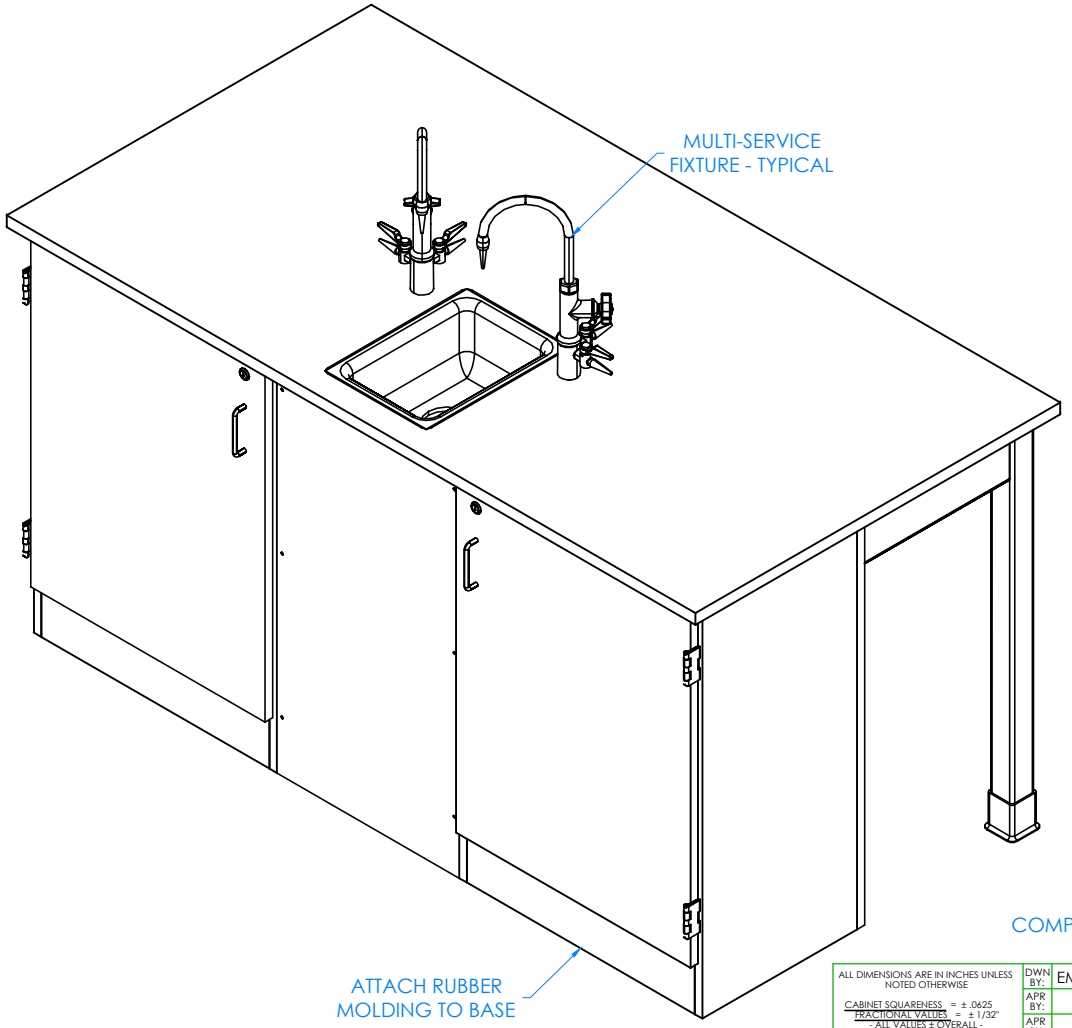

COMPLETE UNIT SHOWN

STEP 9:

- ATTACH RUBBER MOLDING TO BASE OF WORKSTATION USING CONTACT CEMENT.
- SCREW STAINLESS STEEL CORNER BRACKETS ON EACH CORNER OVER BASE MOLDING WITH HARDWARE PROVIDED.
- IF YOU HAVE A "K" SERIES UNIT, INSTALL MULTI-SERVICE FIXTURES IN THE HOLES PROVIDED ON TOP.

NOTE:

1. ALL WATER, ELECTRICAL, AND GAS CONNECTIONS SHOULD BE PERFORMED BY A TRAINED PROFESSIONAL PER LOCAL CODE.

REV.	DESCRIPTION	DATE	NAME	ECN NO.
A	CREATED DRAWING	11/8/16	EMK	-

REVISION LEVEL

ALL DIMENSIONS ARE IN INCHES UNLESS NOTED OTHERWISE	DWN BY:	EMK	DATE DWN: 11/8/16
CABINET SQUARENESS = ± .0625 FRACTIONAL VALUES = ± 1/32" - ALL VALUES ± OVERALL -	APR BY:		DATE APR:
	APR BY:		DATE APR:

CONFIDENTIAL:
ALL DESIGN RIGHTS RESERVED
THE INFORMATION, DATA, DESIGN, AND DRAWINGS EMBODIED IN THIS DOCUMENT AND ALL REPRODUCTIONS THEREOF ARE THE EXCLUSIVE PROPERTY OF DIVERSIFIED WOODCRAFTS, INC.

THESE DOCUMENTS ARE SUPPLIED WITH THE UNDERSTANDING THAT THEY WILL NOT BE DISCLOSED TO THIRD PARTIES WITHOUT WRITTEN CONSENT OF DIVERSIFIED WOODCRAFTS, INC. ANY REPRODUCTION IN PART OR WHOLE WITHOUT WRITTEN CONSENT IS SUBJECT TO LEGAL ACTION.

TITLE:
FORWARD VISION III
ASSEMBLY INSTRUCTIONS

DRAWING NUMBER:	SCALE:	SHEET:	REVISION:
FORWARD VISION III	NTS	12 OF 13	REV A

TROUBLESHOOTING YOUR GFCI ELECTRICAL RECEPTACLE:

PLEASE NOTE: THROUGHOUT ANY OF THE FOLLOWING STEPS (PROCEDURES); IF YOU ARE NOT SURE YOU CAN DO THIS JOB SAFELY, AND COMPETENTLY, REFER THIS WORK TO QUALIFIED PROFESSIONAL!

If your unit comes equipped with a GFCI (Ground Fault Circuit Interrupter) electrical receptacle, and there is no power in the receptacle please consider/check the following:

- The extension cord (if being used) is working properly.
- The breaker hasn't been tripped, or turned off.

This type of GFCI has two testing-related buttons on it. One button is appropriately labeled "TEST", and the other button is labeled "RESET". To test the GFCI receptacle follow these steps:

- Plug in an appliance (lamp or night light) into the outlet. The light should now be on. Then press the "TEST" button on the GFCI. The GFCI "RESET" button should pop out, and the light should go out.
- If the "RESET" button pops out, but the light doesn't go out, the GFCI has been improperly wired. In this case please contact a certified professional. There may also be a problem with other wiring in the same circuit.
- If the "RESET" button doesn't pop out, the GFCI is defective, or malfunctioned, and should be replaced.
- If the GFCI is functioning properly, and the lamp goes out, press the "RESET" button to restore power to the outlet.

Conversely, if you have a GFI that has tripped (which is common) and it will not reset, you may have a wiring short in the circuit, a defective appliance on the circuit, or the GFI itself has become defective. To test a tripping GFCI follow these steps:

- Remove every appliance connected to the GFCI's circuit and reset it. If it doesn't reset there may either be a wiring fault behind a socket outlet, or your GFCI itself has become faulty.
- Make sure whatever you are plugging into to the GFCI is dry and not damaged.
- Only plug in one item at a time. If you are plugging in a defective item it will cause the GFCI to trip, and that item therefore should be replaced.

If you are still having difficulty the easiest way to troubleshoot a GFI is to obtain a GFI tester, which is available at most hardware stores. It plugs into the GFI outlet, and will supply you with a "snapshot" of your connections, indicating wiring problems and/or the condition of the GFI. Another way to troubleshoot is to simply purchase a new GFI and install it.